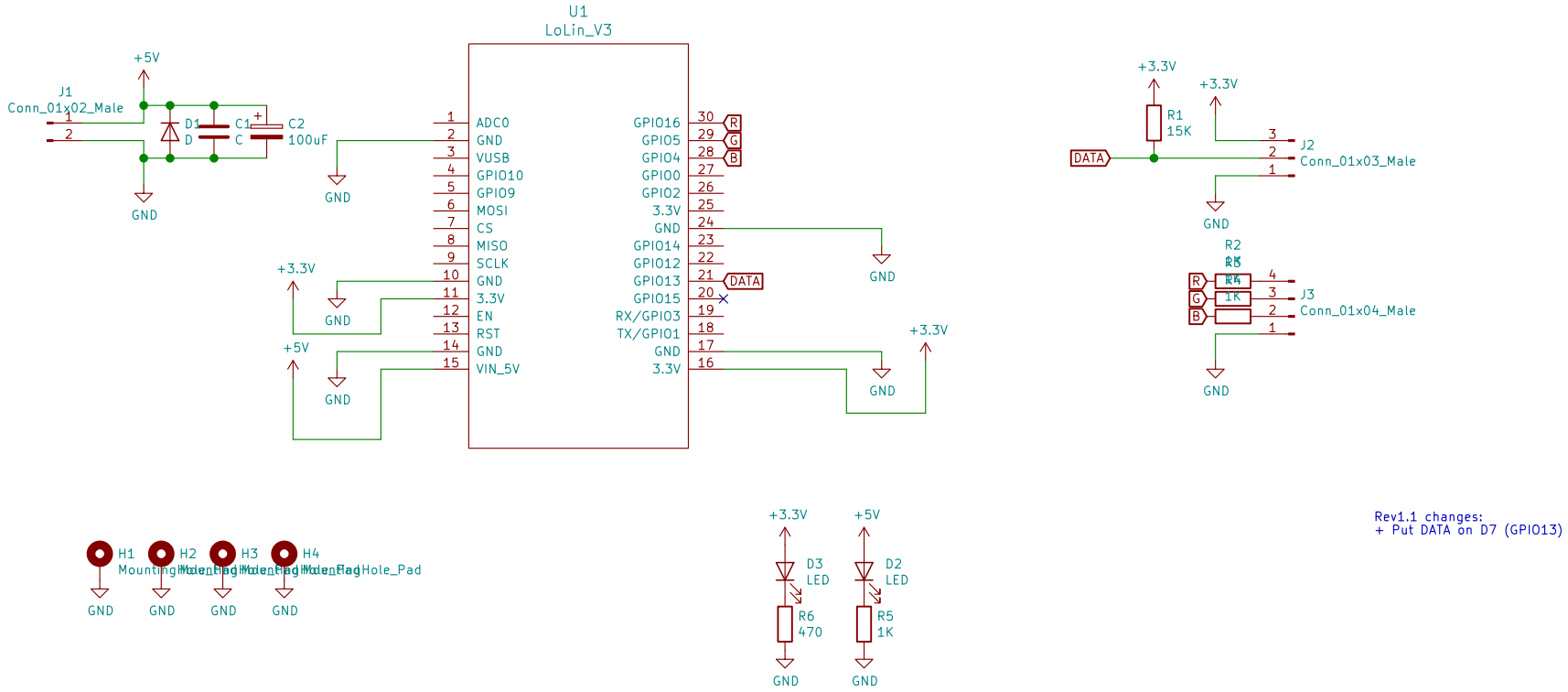

Rev1.1 changes:
+ Put DATA on D7 (GPIO13)

Noppel
vspace.one
Sheet: /
File: noname.sch

Title: Sensornode

Size: A4	Date: 2019-05-06	**Rev: rev1.1**
KiCad E.D.A. kicad 5.0.2-bee76a070ubuntu18.04.1		Id: 1/1